DEPARTMENT OF PLANNING & BUILDING

CITY STANDARD PLAN
6'-0" HIGH MAX 6" BLOCK WALL

PLAN NO. 2

REVISED: 04/05/11

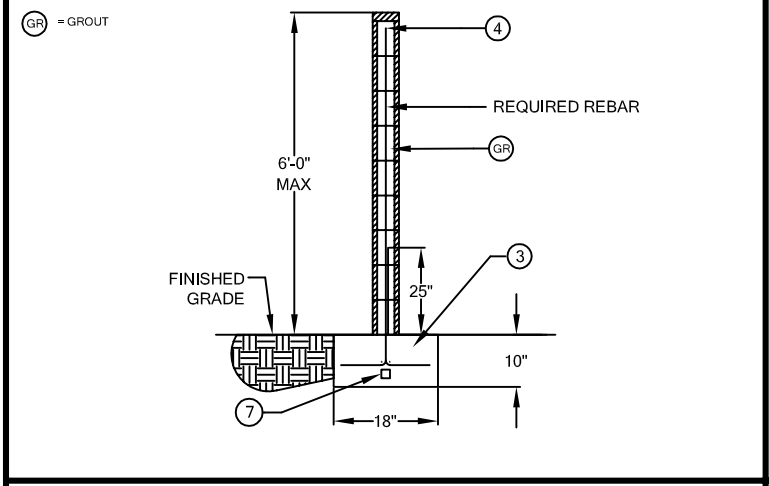

SECTION A-A (**OPTION 1**) ALTERNATE CONTINUOUS FOOTING
(NO PILASTER REQUIRED)

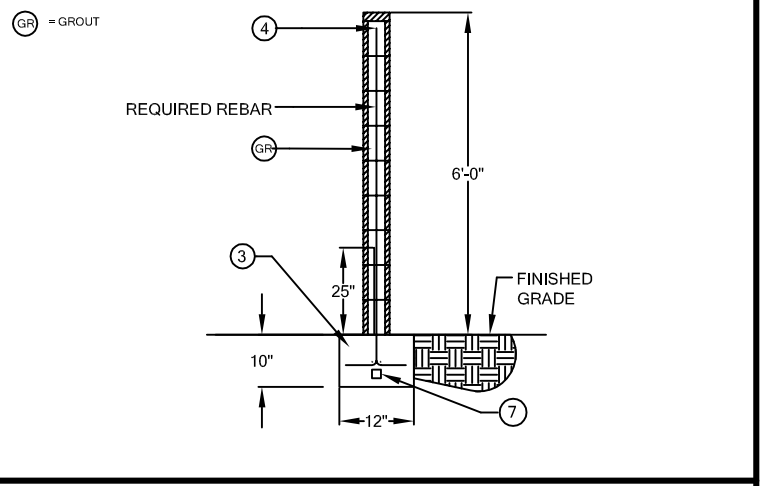

SECTION A-A (**OPTION 2**) ALTERNATE CONTINUOUS FOOTING
(REQUIRED IN BETWEEN PILASTERS)

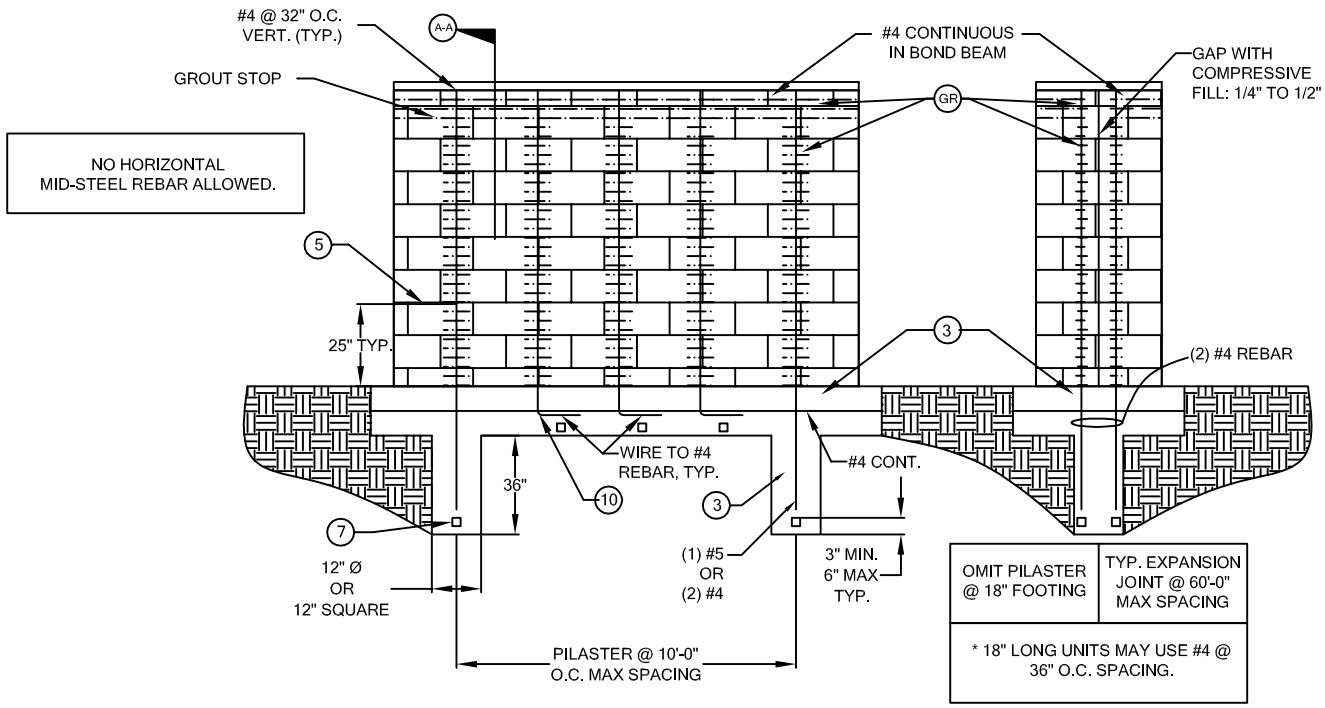

GENERAL NOTES:

1. This design is not to be used for retaining earth.
2. Inspection required prior to placing concrete and all grouting.
3. Concrete: 2000 psi minimum
   * (1) part cement
   * (1/2) part large aggregate
   * (1/2) part sand
   Maximum water to cement ration 7-1/2 gallons / sack.
4. Horizontal bond beam and cells containing reinforcement shall be filled solidly with grout.
   Grout Mix:
   * (1) part cement
   * (2-3) part sand
   * (2) part pea gravel (pea gravel may be omitted).
5. Lap splices: Lap all reinforcement steel a minimum of 40 bar diameter:
   * 20" for #4 rebar
   * 25" for #5 rebar
6. Soil bearing shall not exceed 1000 psf and 150 psf lateral bearing (normal duration).
7. Clearance: Maintain (1) bar diameter minimum clearance in wall, 3" clearance to soil in footing. Use concrete (or equal) supports or spacers or positioners.
8. All workmanship and materials shall conform with the latest edition of the California Building Code and American Concrete Institute for concrete and masonry construction.
9. Horizontal rebar supported by hooked verticals. Alternate hooks or align with horizontal rebar.
10. Standard hook and extensions is 6" minimum. Bends must not crack rebar.

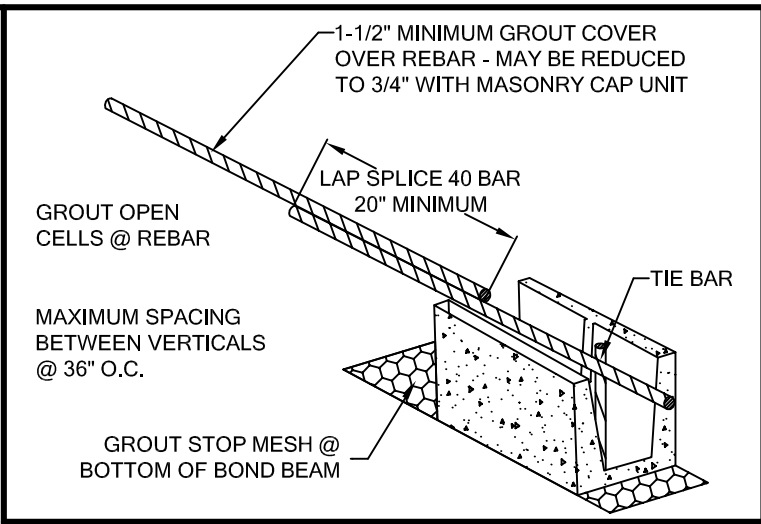

TYPICAL BOND BEAM & LAP SPLICE

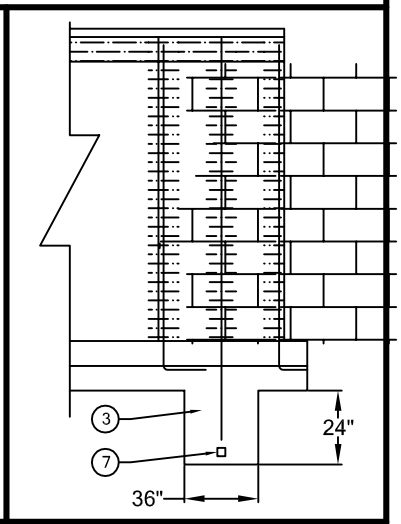

ALTERNATE PILASTER