CITY STANDARD PLAN
TYPE V CONVENTIONAL WOOD-FRAME CONSTRUCTION SHEET
(2010 CRC)

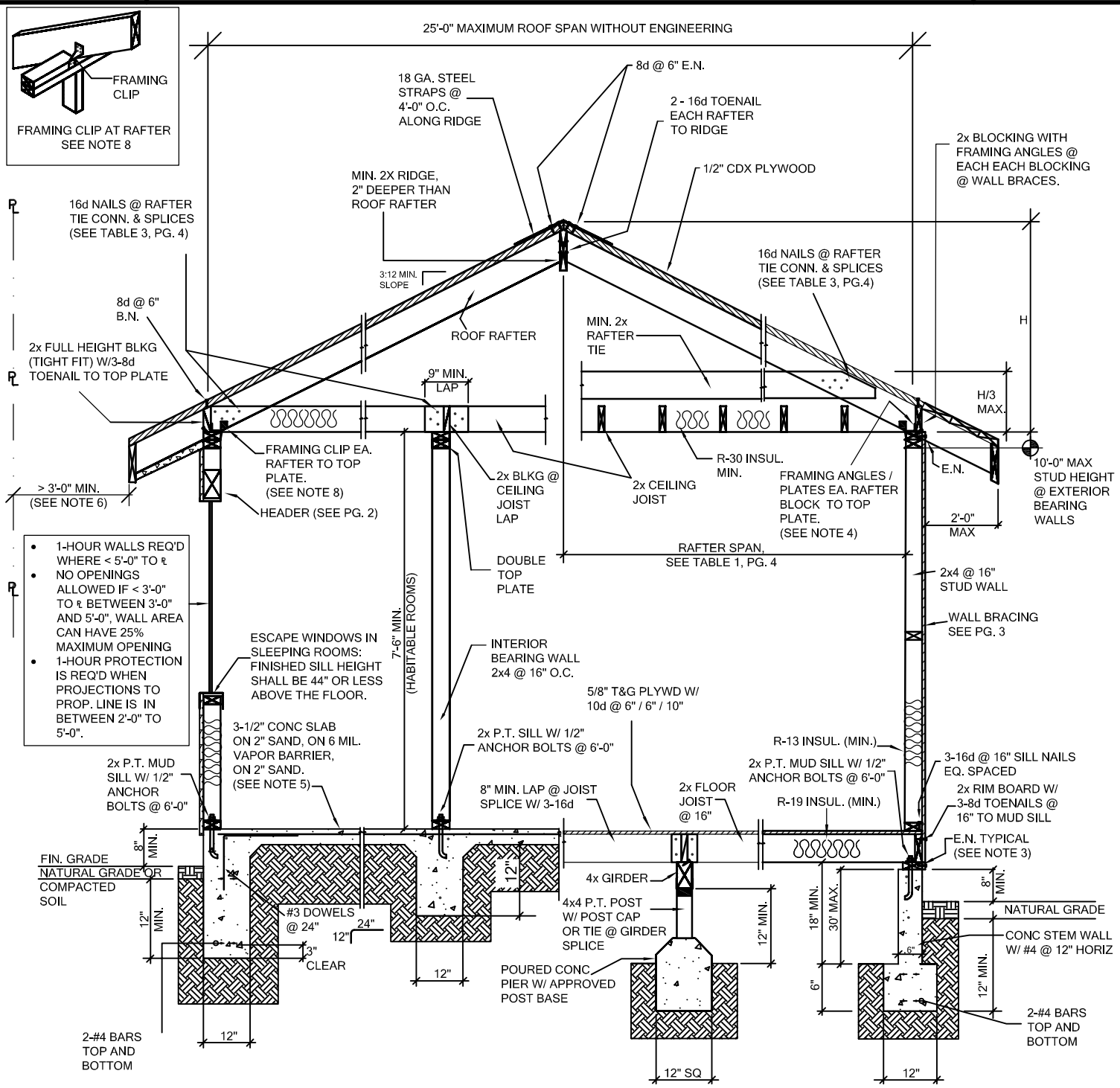

BUILDING SECTION

NOTES:

1. MINIMUM CONCRETE STRENGTH = 2500 psi ; MAXIMUM SOIL BEARING PRESSURE = 1500 psf
2. ANCHOR BOLTS SHALL BE EMBEDDED AT LEAST 7" INTO CONCRETE. FOR TWO-POUR FOUDATIONS, THE REQUIRED EMBEDMENT SHALL BE PROVIDED IN THE FIRST POUR. ANCHOR BOLTS SHALL BE LOCATED NOT MORE THAN 12", OR LESS THAN 4-1/2" FROM SILL PLATE ENDS, CORNERS AND SPLICES. ANCHOR BOLTS SHALL BE INSTALLED WITH 3"x3"x0.229" SQUARE PLATE WASHERS.
3. FASTENERS FOR PRESERVATIVE TREATED WOOD SHALL BE OF HOT DIPPED ZINC-COATED GALVANIZED STEEL, STAINLESS STEEL, SILICON BRONZE OR COPPER.
4. FRAMING ANGLES AND PLATES SHALL BE REQUIRED TO ATTACH EACH RAFTER BLOCK TO THE TOP PLATE. FRAMING ANGLES OR PLATES SHALL BE ICC LISTED, MINIMUM OF 20 GAUGE ANGLES AND PLATES SHALL BE INSTALLED PER MANUFACTURER'S RECOMMENDATIONS.
5. SLAB ON GRADE SHALL BE REINFORCED WITH 6x6 - W1.4xW1.4 WIRE MESH OR #4 BARS @ 24" EACH WAY. REINFORCING SHALL BE LOCATED AT SLAB MID-HEIGHT.
6. EAVE/OVERHANG SETBACKS MAY BE REDUCED TO 2'-0" IF 1-HOUR EAVE CONSTRUCTION IS PROVIDED.
7. P.T. INDICATES "PRESERVATIVE-TREATED WOOD.
8. FRAMING CLIPS SHALL BE 18 GAUGE STEEL WITH 4-8d NAILS PER LEG (8-8d ANILS PER CLIP). FRAMING CLIPS SHALL BE ICC APROVED AND INSTALLED PER MANUFACTURER'S RECOMMENDATIONS.

CITY STANDARD PLAN
TYPE V CONVENTIONAL WOOD-FRAME CONSTRUCTION SHEET
(2010 CRC)

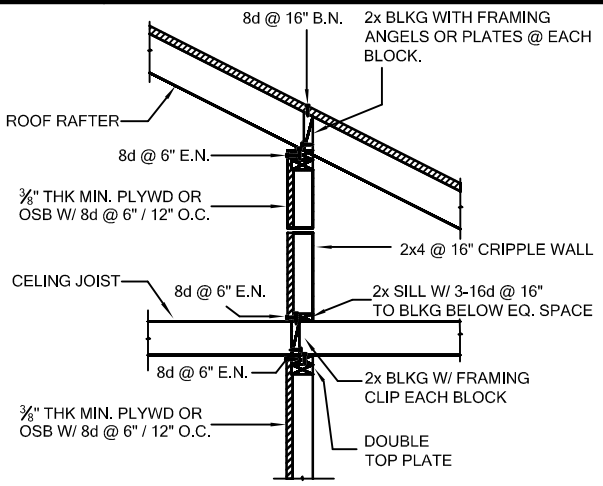

INTERIOR BRACED WALL

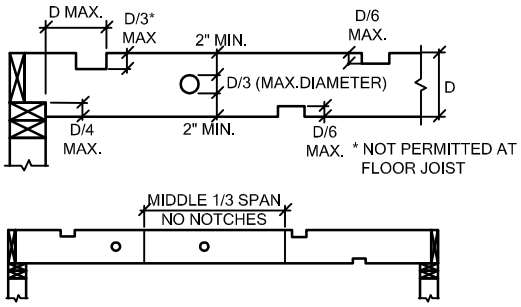

RAFTER, CEILING JOIST AND FLOOR JOIST

CRC R502.8
CRC R602.6
CRC R602.6.1

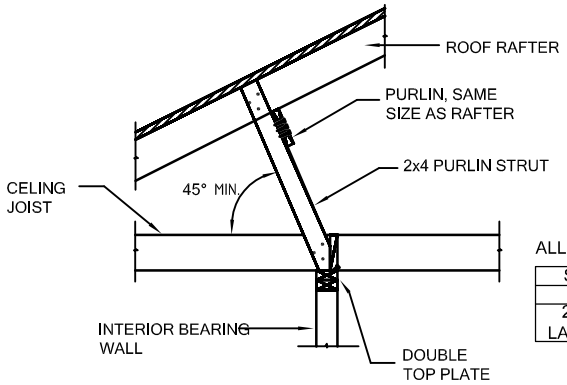

ALLOW. PURLIN SPAN

SIZE	SPAN
2x4	4 FEET
2x6 & LARGER	6 FEET

CRC R802.5.1

PURLIN BRACING

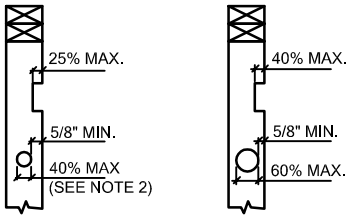

BEARING PARTITIONS & ALL EXTERIOR WALLS

NON-BEARING PARTITIONS

CRC R502.8
CRC R602.6
CRC R602.6.1

NOTES:

1. BORED HOLES SHALL NOT BE LOCATED AT THE SAME SECTION AS A CUT OR NOTCH.
2. BORED HOLES IN BEARING STUDS MAY BE INCREASED TO 60% IF STUDS ARE DOUBLED; NO MORE THAN TWO SUCCESSIVE DOUBLE STUDS MAY BE BORED.

NOTCHING AND HOLES

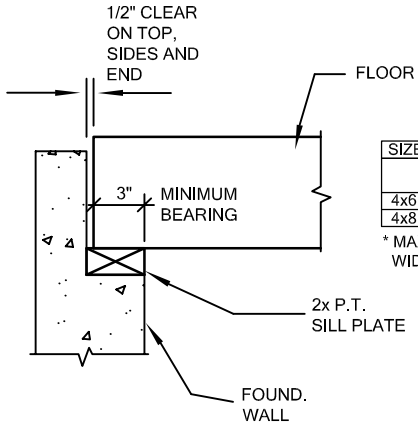

DF #1 FLOOR GIRDERS

SIZE	ALLOWABLE SPAN*	
	NON-BRG PARTITIONS	BRG PARTITIONS
4x6	5'-3"	5'-8"
4x8	6'-10"	7'-4"

* MAXIMUM TRIBUTARY WIDTH = 8'-0"

NOTES:

1. FLOOR GIRDERS SHALL BE SPACED AT 8'-0" O.C. MAX.

CRC R502.5
CRC R502.6

FLOOR GIRDERS

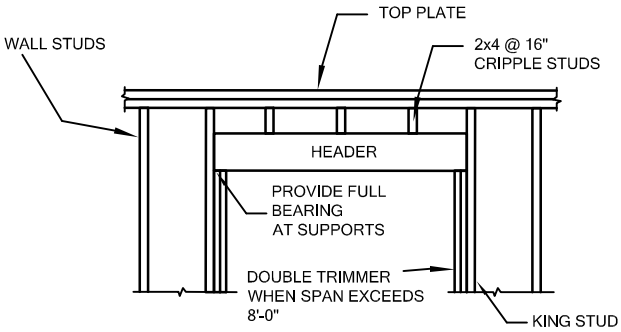

DF #1 HEADER, ALLOWABLE SPANS*

SPAN	SIZE
UP TO 4'-0"	4x4
4'-1" TO 6'-0"	4x6
6'-1" TO 8'-0"	4x8
8'1" TO 10'-0"	4x10
10'-1" TO 12'-0"	4x12

* ALSO SEE HEADER SPAN TABLE R502.5 (1) FOR ADDITIONAL INFORMATION

* MAXIMUM TRIBUTARY WIDTH = 12'-6"

CRC R602.7

HEADER / LINTEL

CITY STANDARD PLAN
TYPE V CONVENTIONAL WOOD-FRAME CONSTRUCTION SHEET
(CRC 2010)

NOTE: FOR WALL ATTACHMENTS, SEE TABLE R602.3 (1) & (2)

BRACED WALL LINES SHALL BE PROVIDED AT 25'-0" MAX. IN BOTH DIRECTIONS.

BRACED WALLS OF STUCCO SHALL BE FULL LENGTH. OPENINGS ARE NOT PERMITTED.

WALL TYPES SHALL NOT BE MIXED ALONG A BRACED WALL LINE.

INTERIOR BRACED WALLS SHALL EXTEND TO THE ROOF.

BRACED WALLS SHALL START NO MORE THAN 8'-0" FROM THE ENDS OF A BRACED WALL LINE.

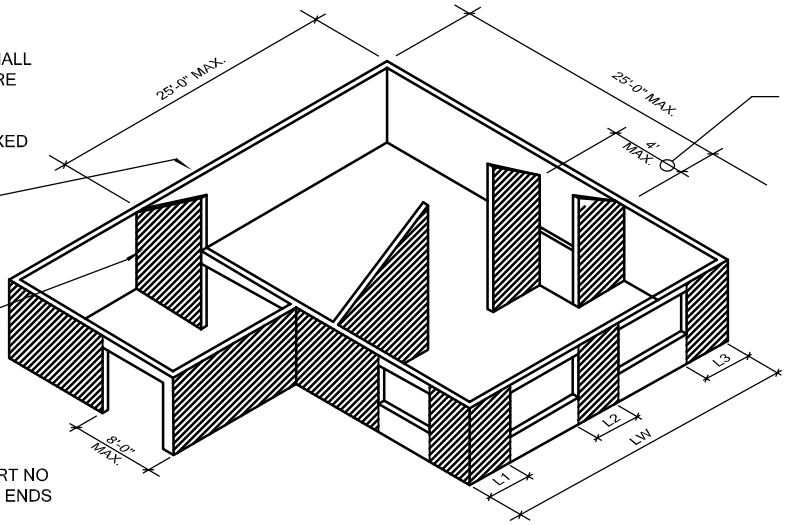

4'-0" MAXIMUM OFFSET ALONG BRACED WALL LINE.

MINIMUM LENGTH OF WOOD STRUCTURAL PANEL WALLS: 12'-0" FOR EVERY 25'-0"

$$\frac{L1 + L2 + L3}{LW} \geq 0.48$$

$L1 + L2 + L3 \geq 12'\text{-}0"$

$L1, L2, L3 \geq 4'$

NOTE:
HOLDDOWNS ARE REQ'D WHERE LESS THAN 6'-0"

BASIC COMPONENTS OF THE LATERAL BRACING SYSTEM

~ PROPOSED BUILDING SHALL BE OF RECTANGULAR OR L-SHAPED IN PLAN ~

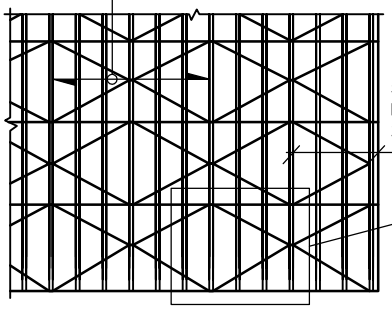

PARTIAL ROOF/FLOOR PLAN

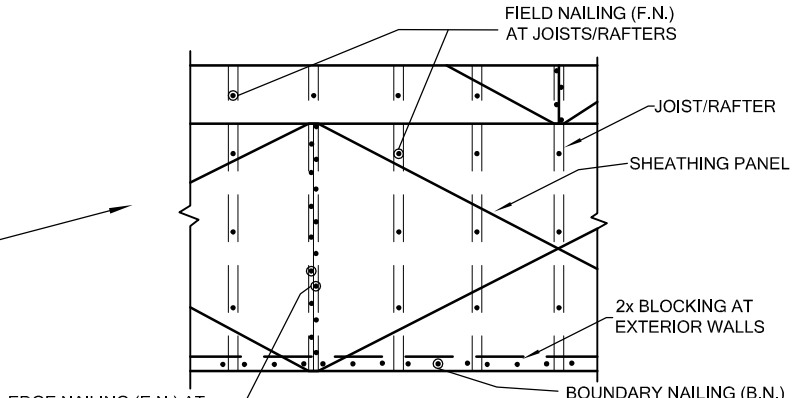

ROOF/FLOOR SHEATHING

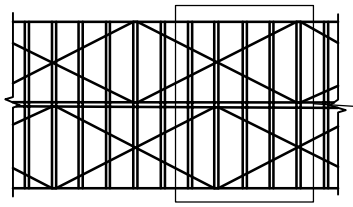

PARTIAL WALL ELEVATION

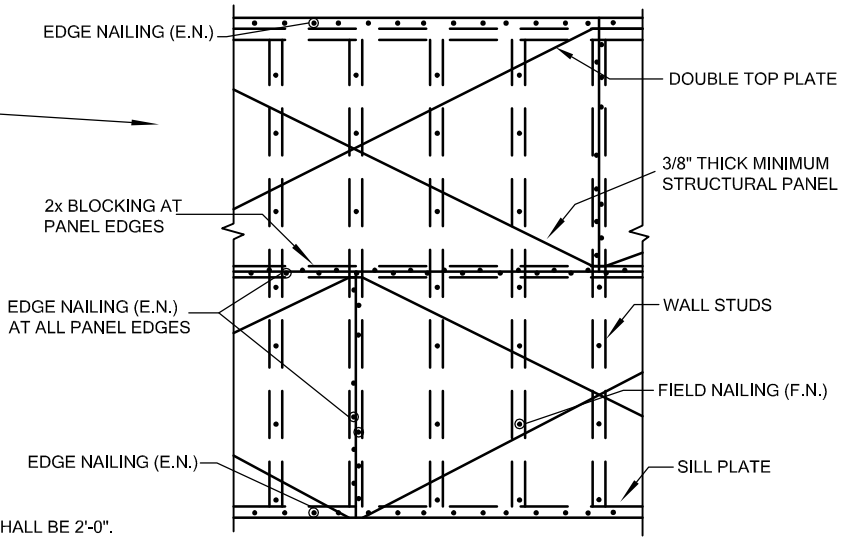

WALL SHEATHING

PANEL NAILING SCHEDULE

LOCATION	B.N. / E.N. / F.N.
ROOFS:	8d @ 6" / 6" / 12"
FLOORS:	10d @ 6" / 6" / 10"
WALLS:	8d @ – / 6" / 12"

NOTES:
1. NAILS SHALL BE PLACED ⅜" FROM PANEL EDGES.
2. PROVIDE ⅛" GAP BETWEEN SHEATHING PANELS.
3. MINIMUM DIMENSION OF SHEATHING PANEL IN ANY DIRECTION SHALL BE 2'-0".
4. WALL SHEATHING PANELS MAY BE INSTALLED WITH THE LONG DIRECTION ORIENTED VERTICALLY.
5. FOR WALL ATTACHMENTS, SEE TABLE R602.3 (1) & (2)

CITY STANDARD PLAN
TYPE V CONVENTIONAL WOOD-FRAME CONSTRUCTION SHEET
(2010 CRC)

GENERAL NOTES

1. SEE FASTENING SCHEDULE (CRC TABLE R602.3 (1)) FOR NAILING NOT SHOWN.
2. BEARING WALLS AND BRACED WALLS REQUIRE CONTINUOUS FOOTINGS.
3. "DF" ON THESE SHEETS REFERS TO DOUGLAS FIR-LARCH. SAWN LUMBER SHALL BE IDENTIFIED BY THE GRADE MARK OF AN APPROVED LUMBER GRADING OR INSPECTION AGENCY PER CRC R502.1, R602.1 & R802.1.
4. "DL" AND "LL" ON THESE SHEETS INDICATES "DEAD LOAD" AND "LIVE LOAD,'" RESPECTIVELY.
5. WOOD MEMBERS SHALL BE OF SUFFICIENT SIZE TO PREVENT SPLITING DUE TO NAILING. SPLIT MEMBERS SHALL BE REMOVED AND REPLACED.
6. WHEN FRAMED WITH ENGINEERED WOOD TRUSSES, ROOF DIAPHRAGMS SHALL BE CONNECTED TO INTERIOR BRACED WALLS BY MEANS OF DRAG TRUSSES OR TRUSS BLOCKING.

TABLE 1 -- DF#2 RAFTERS, ALLOWABLE SPANS*

RAFTER SPACING	DL = 10 PSF, LL = 20 PSF				
	2x4	2x6	2x8	2x10	2x12
12"	9'-10"	15'-6"	20'-5"	25'-8"	--
16"	8'-11"	14'-1"	18'-2"	22'-3"	25'-9"
24"	7'-10"	11'-9"	14'-10"	18'-2"	21'-0"

* DATA FROM CRC TABLE R802.5 (1).

TABLE 2 -- DF#2 CEILING JOISTS, ALLOWABLE SPANS*

JOIST SPACING	ATTICS WITHOUT STORAGE, LL = 10 PSF				ATTICS WITH LIMITED STORAGE, LL = 20 PSF			
	2x4	2x6	2x8	2x10	2x4	2x6	2x8	2x10
12"	12'-5"	19'-6"	25'-8"	--	10'-0"	15'-9"	20'-1"	24'-6"
16"	11'-3"	17'-8"	23'-0"	--	8'-9"	12'-10"	16'-3"	19'-10"
24"	9'-10"	14'-10"	18'-9"	22'-11"	7'-2"	10'-6"	13'-3"	16'-3"

* DATA FROM CRC TABLE R802.4 (1). ATTICS WITH STORAGE ARE THOSE WHERE THE CLEAR HEIGHT BETWEEN THE CEILING JOIST AND RAFTER IS 42" OR GREATER. ATTICS SHALL BE INHABITABLE. CEILING DEAD LOAD SHALL NOT EXCEED 5 PSF.

TABLE 3 -- RAFTER TIE CONNECTIONS, # 16d COMMON NAILS.*

TIE SPACING	ROOF PITCH																	
	3:12			4:12			5:12			7:12			9:12			12:12		
	SPAN			SPAN			SPAN			SPAN			SPAN			SPAN		
	12'	20'	25'	12'	20'	25'	12'	20'	25'	12'	20'	25'	12'	20'	25'	12'	20'	25'
12"	4	6	8	3	4	5	3	3	4	3	3	3	3	3	3	3	3	3
16"	5	7	10	3	5	7	3	4	5	3	3	4	3	3	3	3	3	3
24"	7	11	15	4	7	10	4	6	8	3	4	6	3	3	5	3	3	3
32"	10	14	19	6	9	13	5	8	10	4	6	8	3	4	6	3	3	4
48"	14	21	29	8	14	19	7	11	15	5	8	11	4	6	9	3	4	6

* CRC TABLE R802.5.1 (9) VALUES ADJUSTED FOR DF#2 FRAMING. THE NUMBER OF NAILS SPECIFIED IN THE TABLE SHALL BE PROVIDED AT EACH CONNECTION. WHEN FULL-HEIGHT INTERIOR BEARING WALLS OR PURLIN BRACING ARE PROVIDED, RAFTER TIE NAILING MAY BE REDUCED PROPORTIONAL TO THE REDUCTION IN RAFTER SPAN; NO LESS THAN 3 NAILS SHALL BE PROVIDED AT EACH CONNECTION. NO SNOW LOAD.

TABLE 4 -- DF#2 FLOOR JOIST, ALLOWABLE SPANS*

JOIST SPACING	DL = 10 PSF, LL = 40 PSF			
	2x6	2x8	2x10	2x12
12"	10'-9"	14'-2"	17'-9"	20'-7"
16'	9'-9"	12'-7"	15'-5"	17'-10"
24"	8'-1"	10'-3"	12'-7"	14'-7"

* DATA FROM CRC TABLE R502.3.1 (1)

TABLE 5 -- PLYWOOD OR OSB FLOOR AND ROOF SHEATHING, ALLOWABLE SPANS*

SHEATHING GRADES		ROOF				FLOOR
SPAN RATING FLOOR/ROOF	SPAN THICKNESS	MAX. SPAN (in.)		LOADS (psf)		PANEL EDGES WITH T & G JOINTS OR BLOCKING MAX. SPAN (in.)
		WITH EDGE SUPPORTS	WITHOUT EDGE SUPPORTS	TOTAL LOAD	LIVE LOAD	
24/0	3/8, 7/16, 1/2	24	20	40	30	0
24/16	7/16, 1/2	24	24	50	40	16
32/16	15/32, 1/2, 5/8	32	28	40	30	16
40/20	19/32, 5/8, 3/4, 7/8	40	32	40	30	20
48/24	23/32, 3/4, 7/8	48	36	45	35	24

* DATA FROM CRC TABLE R503.2.1.1 (1). SHEATHING PANELS SHALL BE CONTINOUS OVER TWO OR MORE SPANS AND PERPENDICULAR TO SUPPORTS. FOR ½" SHEATHING, MAXIMUM SPAN SHALL BE 24". EDGE SUPPORT MAY BE PROVIDED BY TONGUE AND GROOVE EDGES, 2x BLOCKING, OR PANEL EDGE CLIPS.