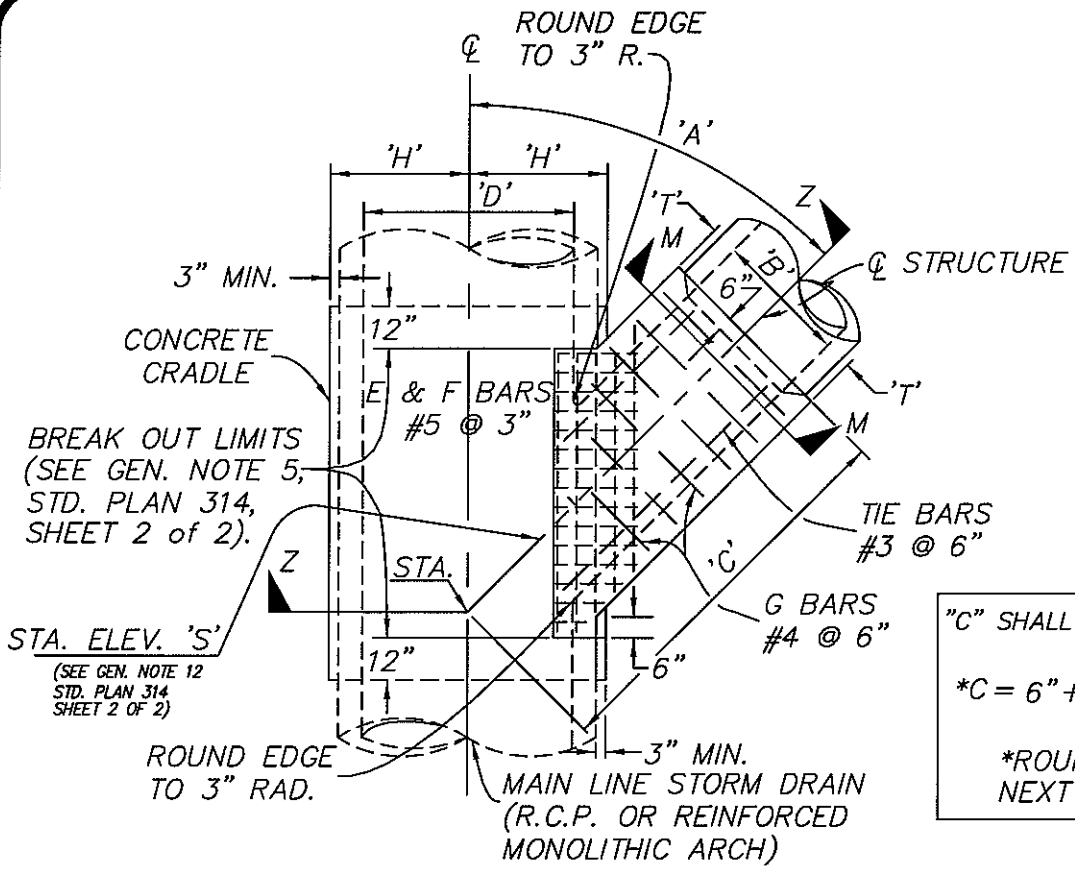

PLAN

"C" SHALL BE SHOWN ON PLANS

$$*C = 6" + \left(\frac{\frac{7}{12}D + 6"}{SIN\ A}\right) + \left(\frac{\frac{B}{2} + T}{TAN\ A}\right)$$

*ROUND OFF TO THE NEXT HIGHER FOOT

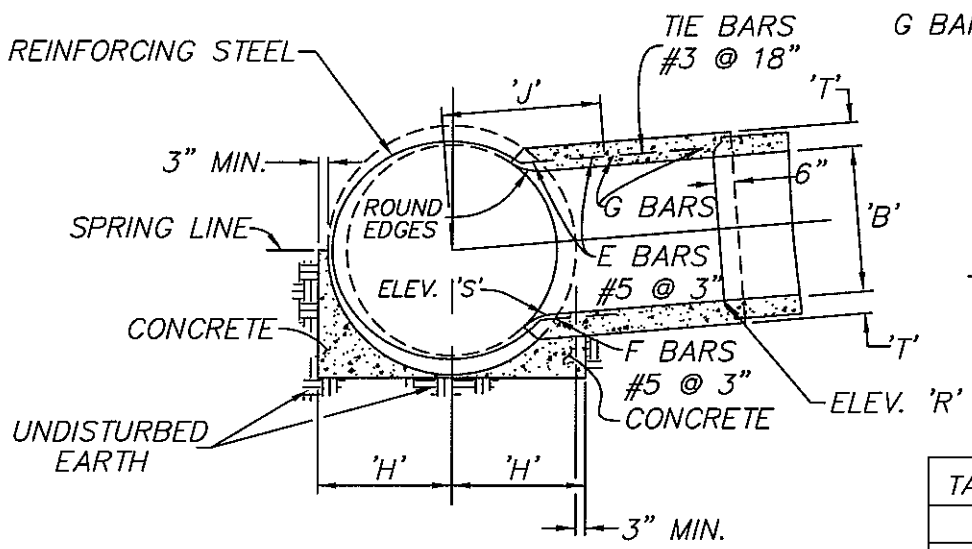

SECTION Z-Z

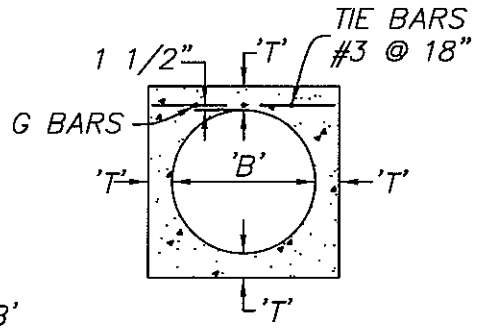

SECTION M-M

TABLE OF VALUES FOR 'T'	
'B'	'T'
18" TO 21"	6"
24" TO 39"	7"

APPROVED:

CITY ENGINEER

REVISION DATE: MAY 2008

CITY OF HUNTINGTON BEACH

DEPARTMENT OF PUBLIC WORKS

JUNCTION STRUCTURE TYPE "E"

STANDARD PLAN 314

1 of 2