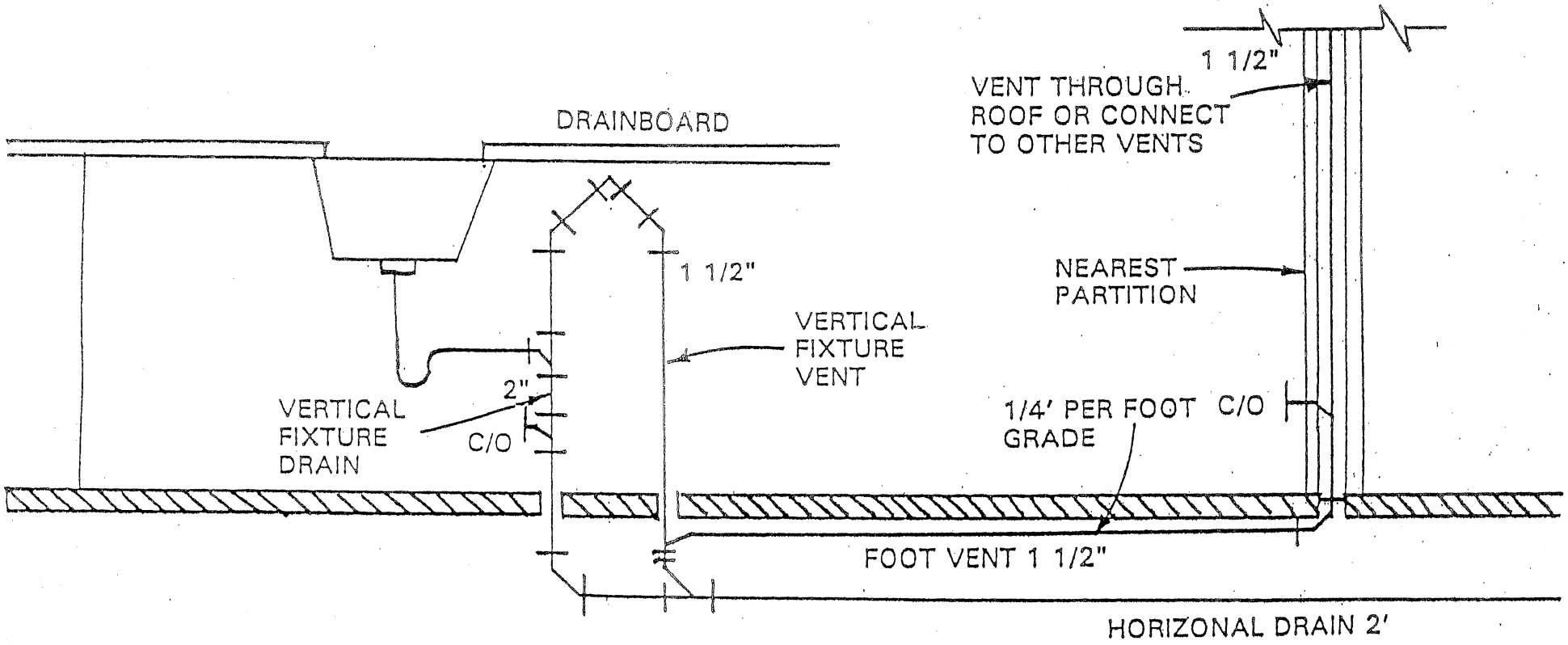

ACCEPTABLE ISLAND SINK INSTALLATION